Docking

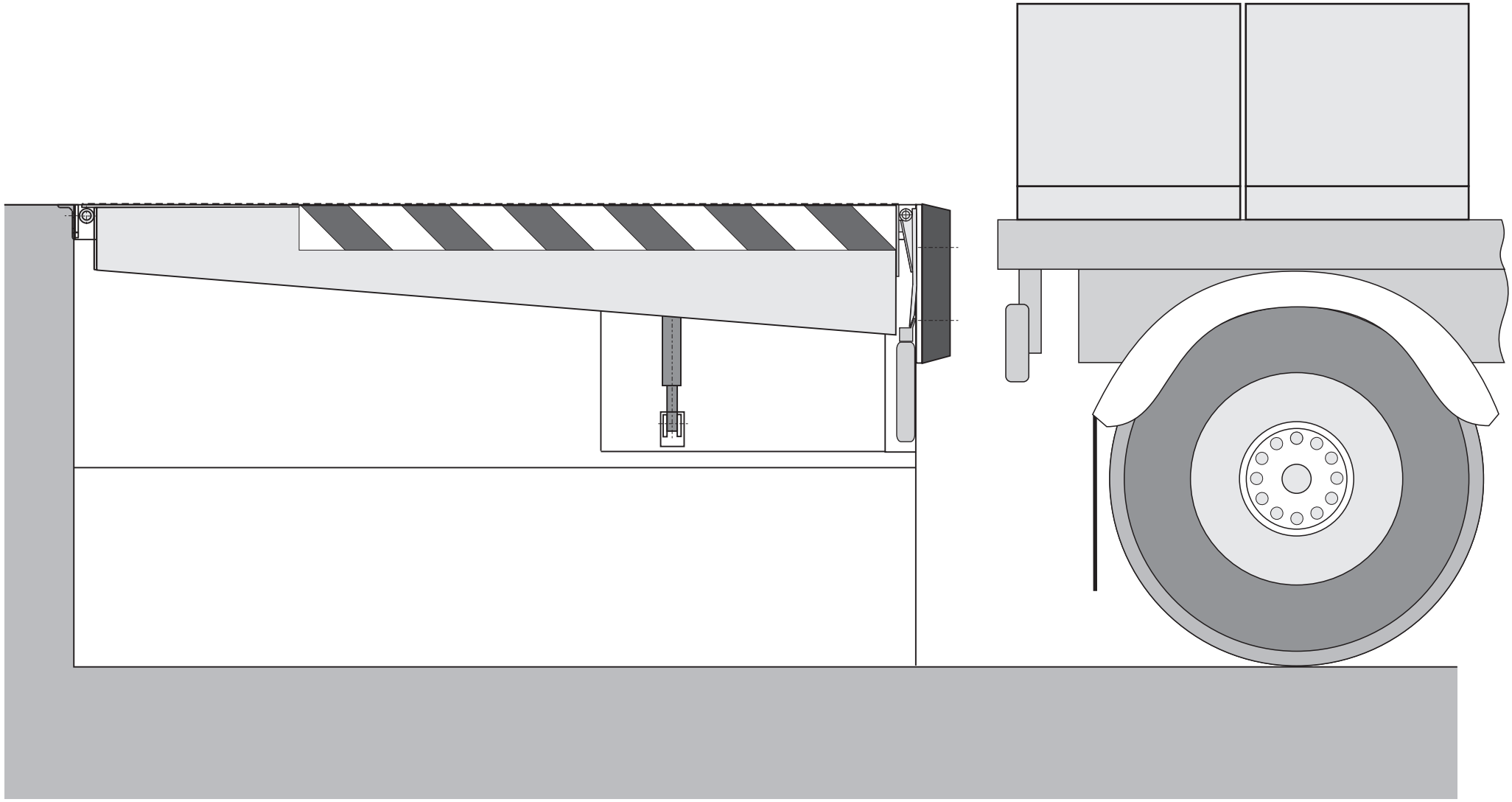

1

Loading position

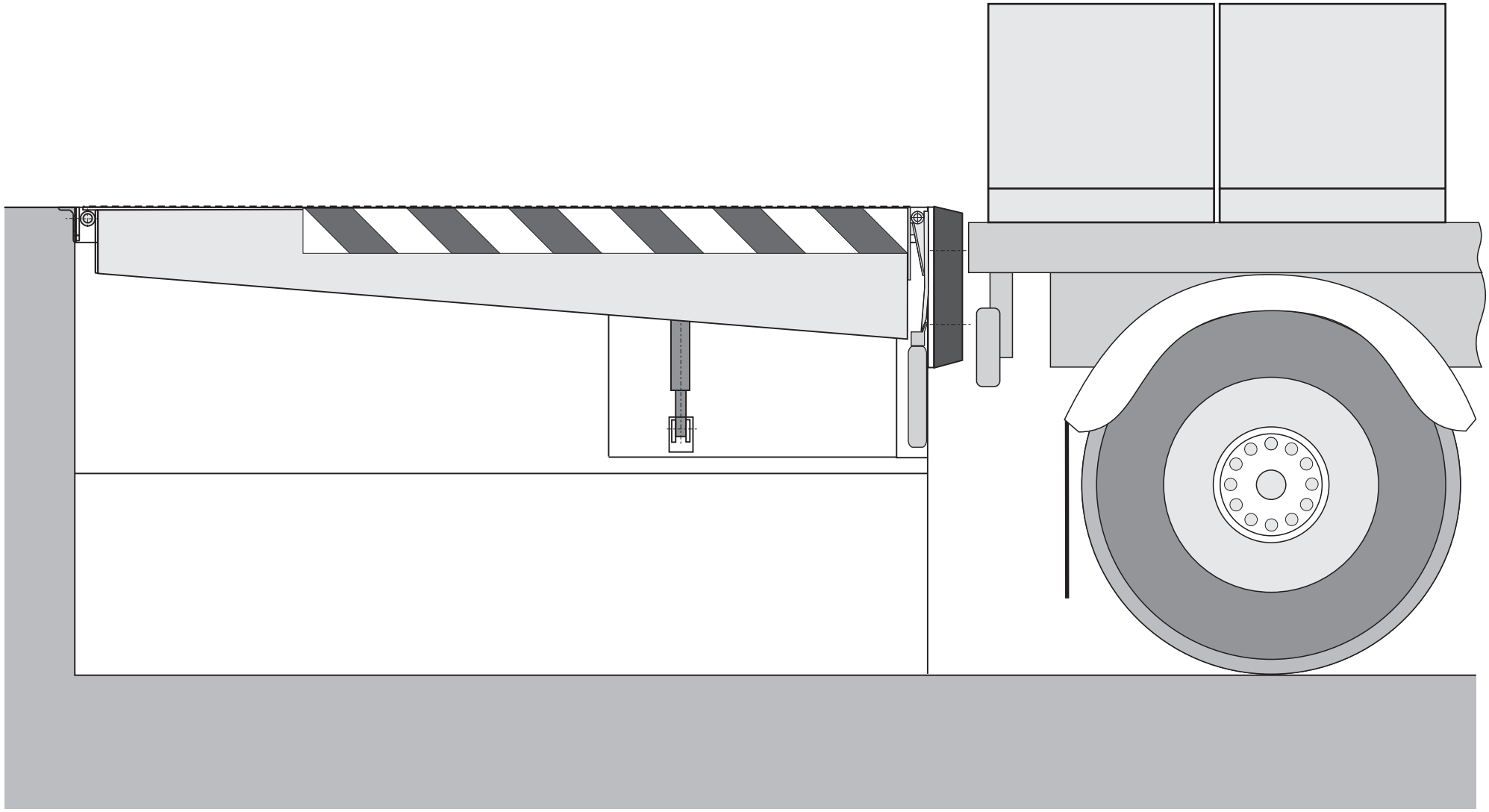

wrong position
20sec / 20sec

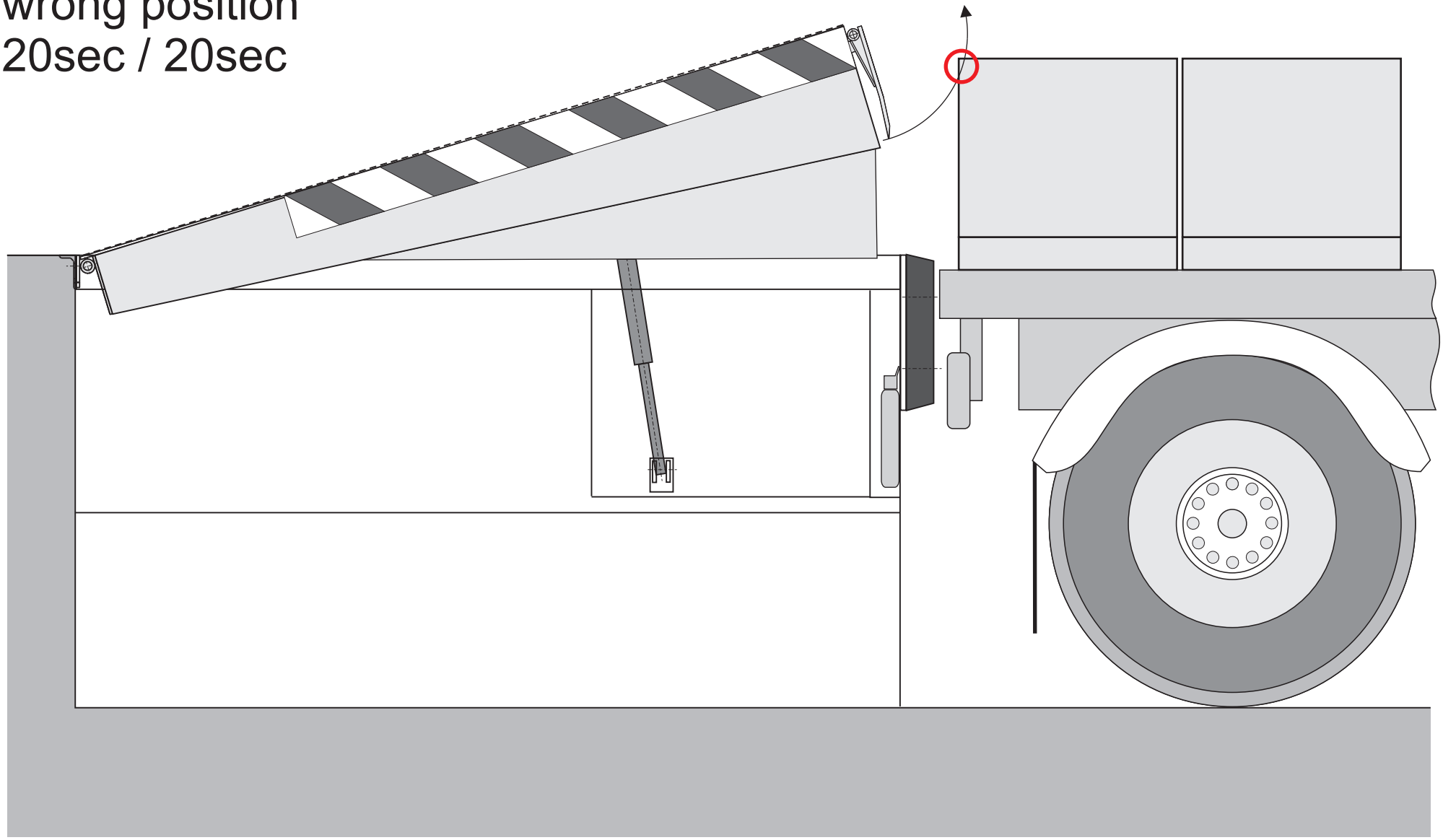

new docking
60sec / 80sec

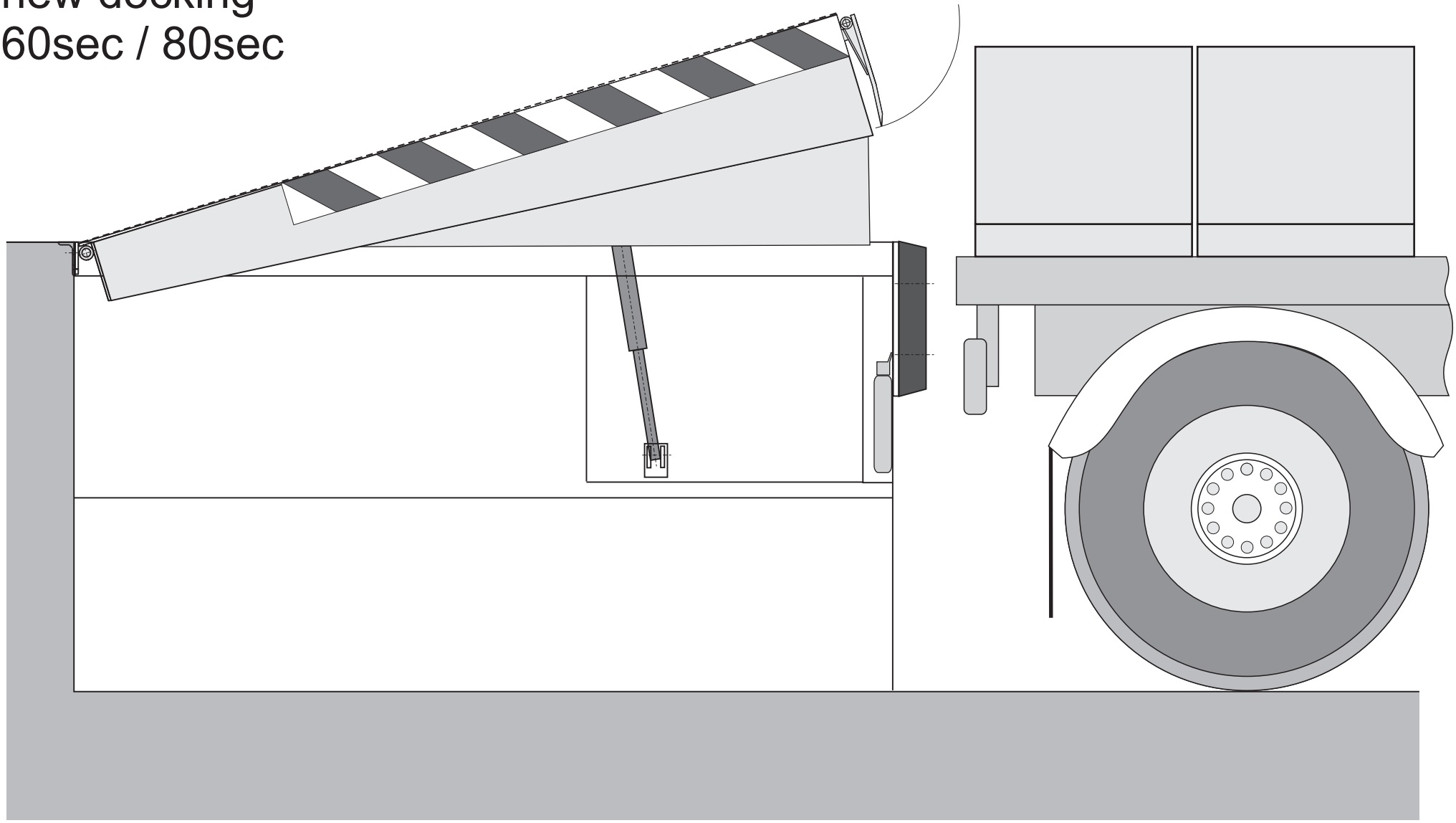

wrong position
20sec / 100sec

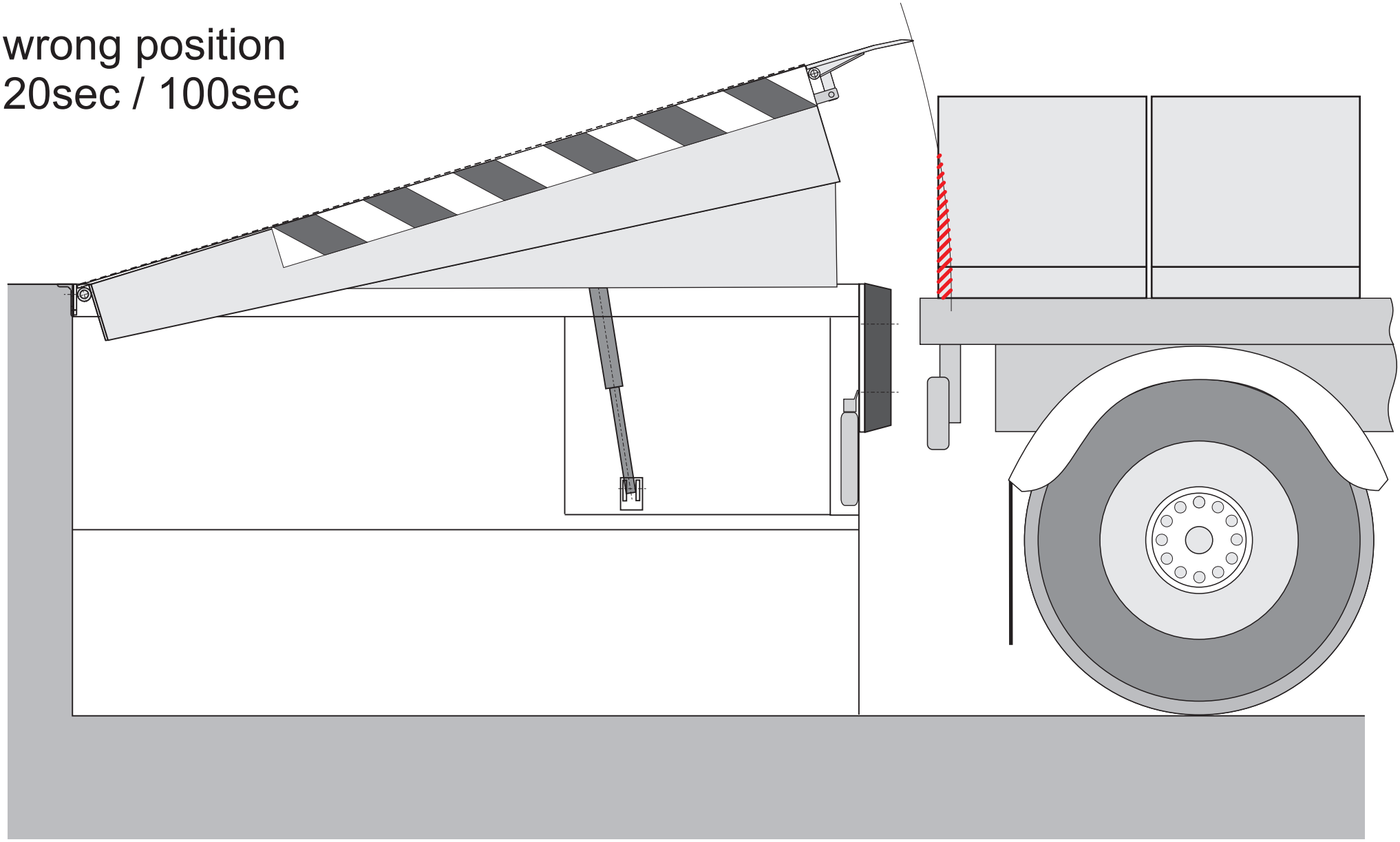

new docking - right position
60sec / 160sec

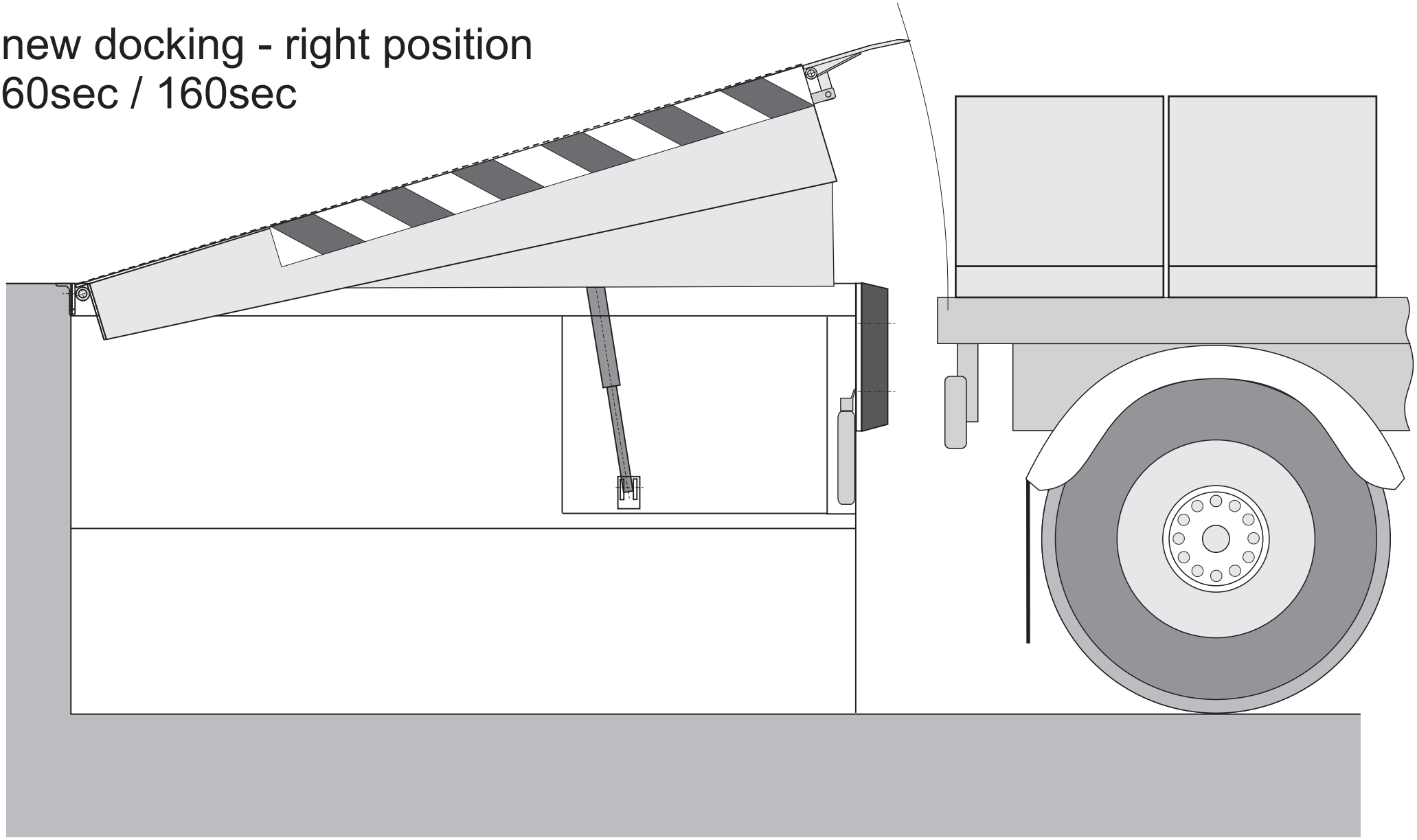

new docking - right position
15sec / 175sec

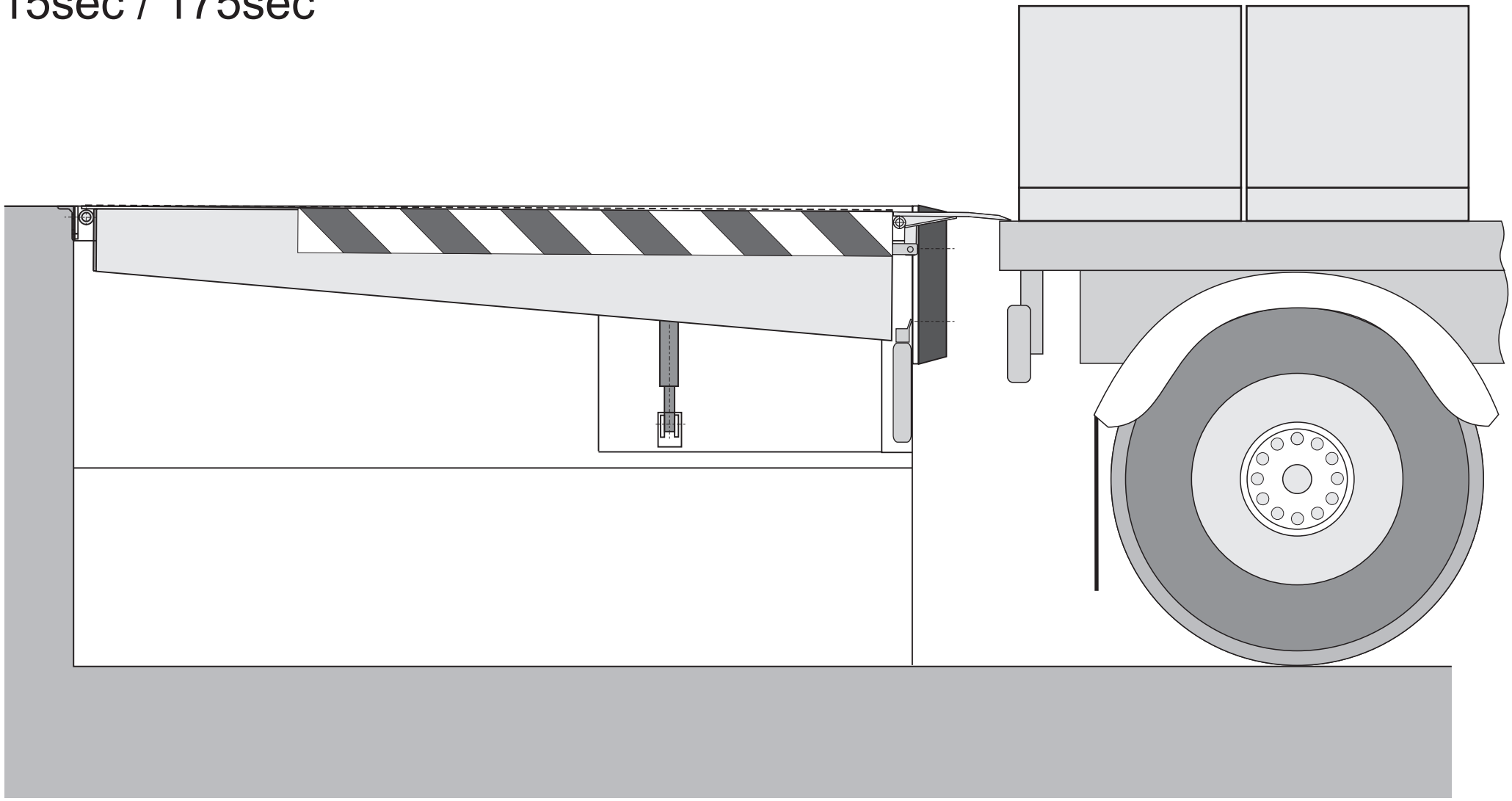

Loading completed

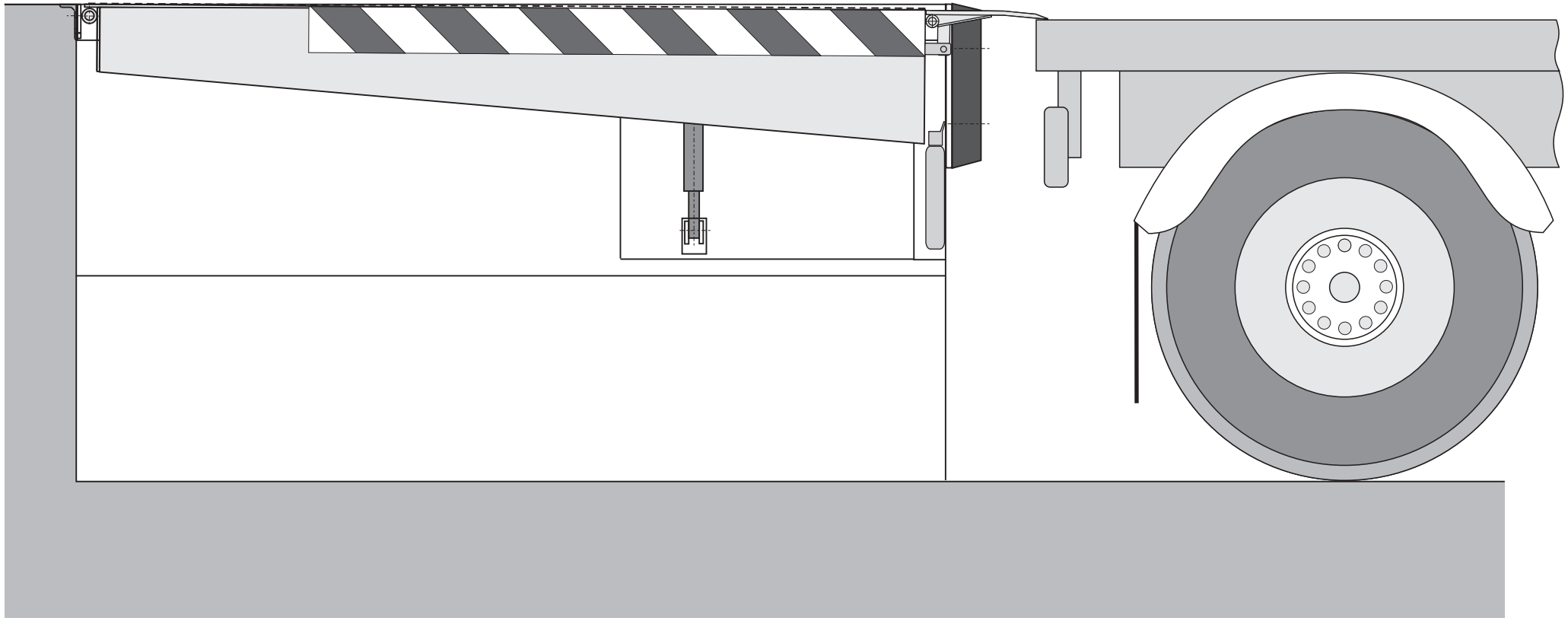

Leveller into home position 1

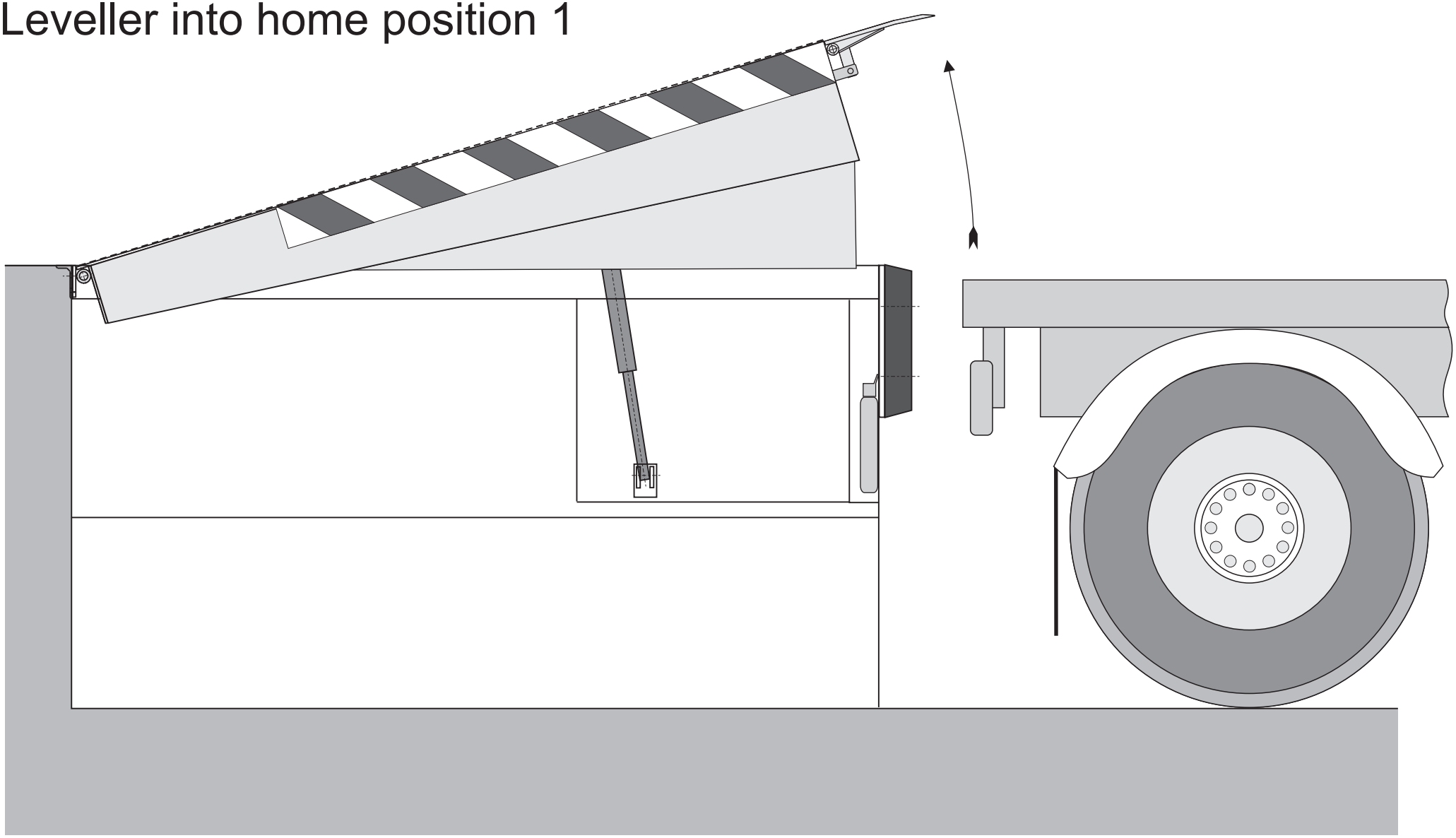

Leveller into home position 2

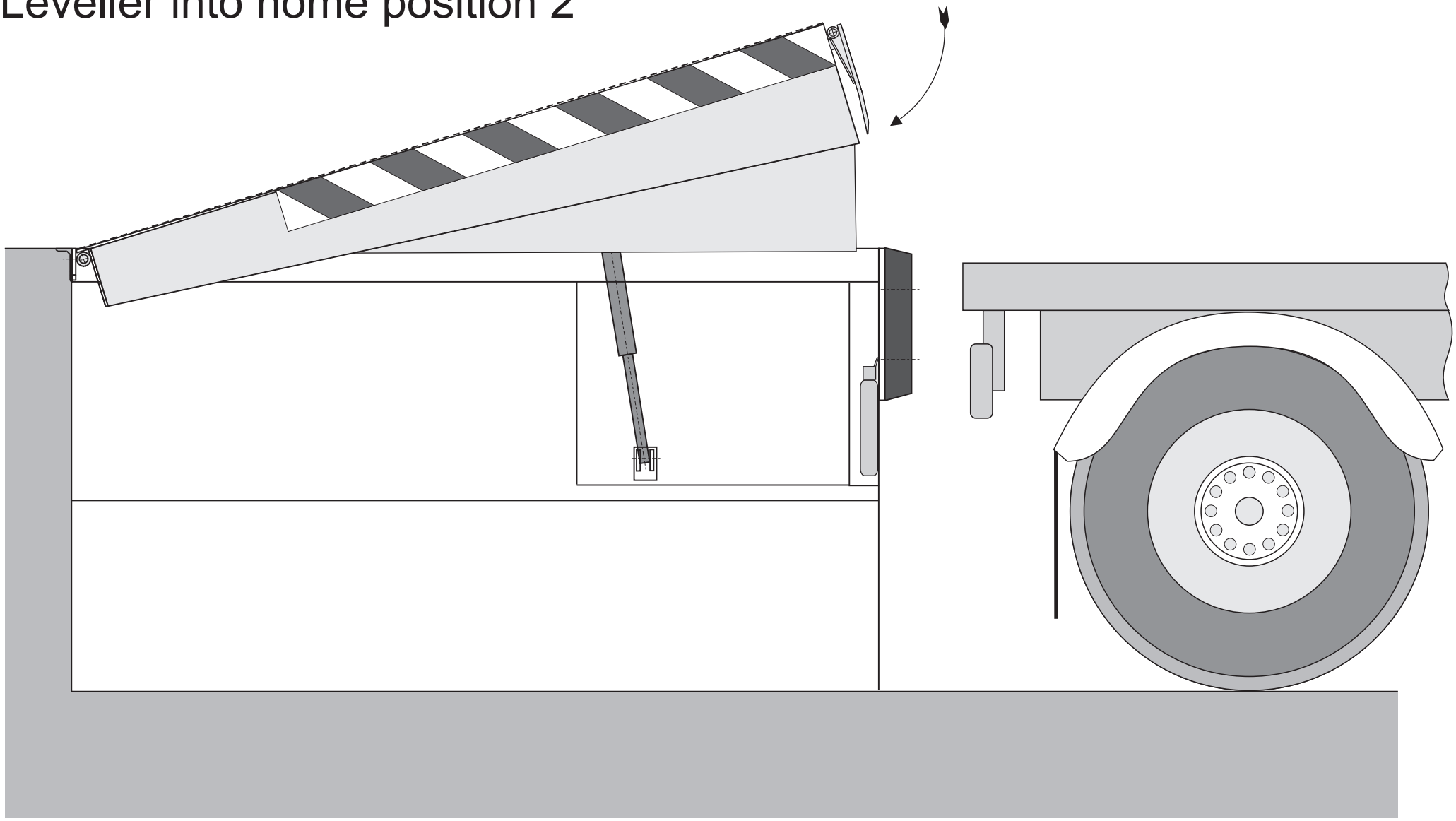
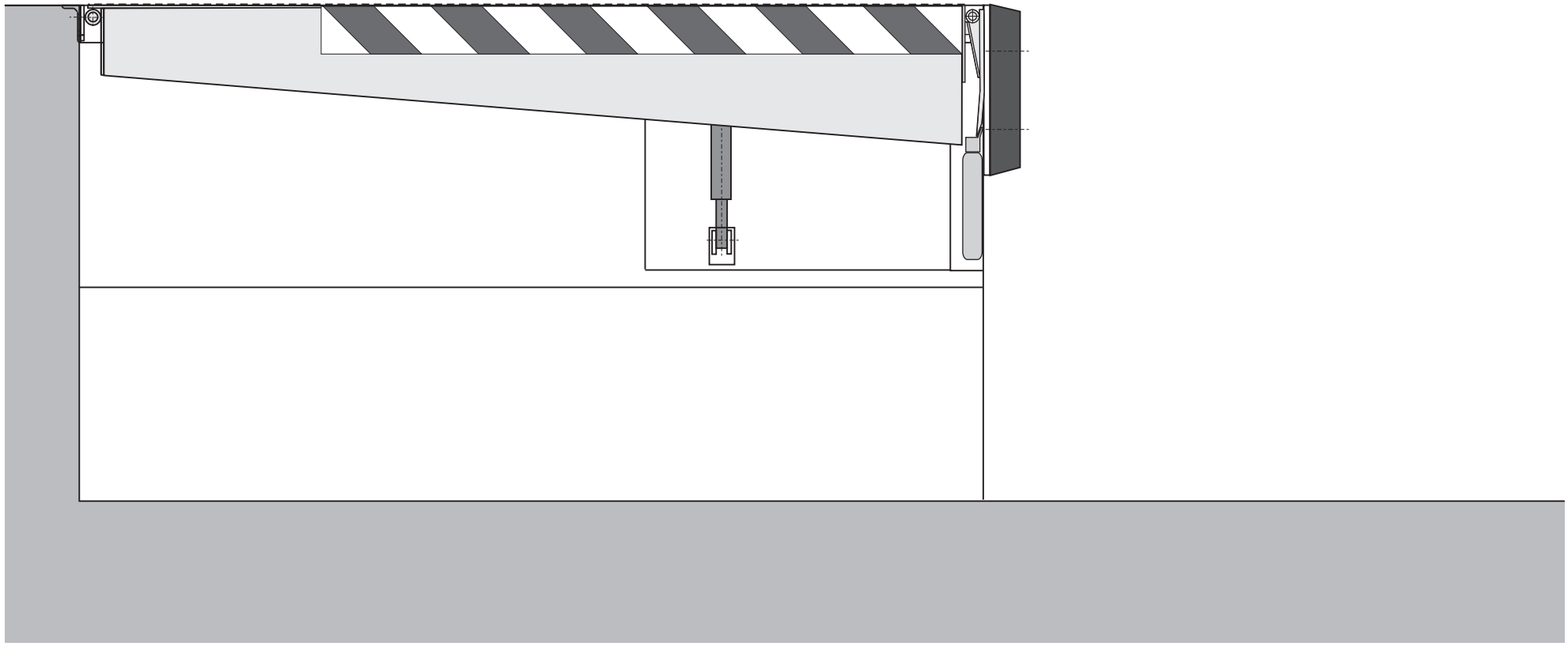
Leveller into home position 3